UNIVERSITY OF CAMBRIDGE INTERNATIONAL EXAMINATIONS
General Certificate of Education Advanced Level

CANDIDATE NAME

CENTRE NUMBER

CANDIDATE NUMBER

1746825571

PHYSICS **9702/41**

Paper 4 A2 Structured Questions **October/November 2010**

1 hour 45 minutes

Candidates answer on the Question Paper.

No Additional Materials are required.

READ THESE INSTRUCTIONS FIRST

Write your Centre number, candidate number and name on all the work you hand in.
Write in dark blue or black pen.
You may use a soft pencil for any diagrams, graphs or rough working.
Do not use staples, paper clips, highlighters, glue or correction fluid.
DO **NOT** WRITE IN ANY BARCODES.

Answer **all** questions.
You may lose marks if you do not show your working or if you do not use appropriate units.

At the end of the examination, fasten all your work securely together.
The number of marks is given in brackets [ ] at the end of each question or part question.

For Examiner's Use	
1	
2	
3	
4	
5	
6	
7	
8	
9	
10	
11	
12	
Total	

This document consists of **24** printed pages.

© UCLES 2010

Data

speed of light in free space,	$c = 3.00 \times 10^{8}\ \text{m s}^{-1}$
permeability of free space,	$\mu_0 = 4\pi \times 10^{-7}\ \text{H m}^{-1}$
permittivity of free space,	$\varepsilon_0 = 8.85 \times 10^{-12}\ \text{F m}^{-1}$
elementary charge,	$e = 1.60 \times 10^{-19}\ \text{C}$
the Planck constant,	$h = 6.63 \times 10^{-34}\ \text{J s}$
unified atomic mass constant,	$u = 1.66 \times 10^{-27}\ \text{kg}$
rest mass of electron,	$m_e = 9.11 \times 10^{-31}\ \text{kg}$
rest mass of proton,	$m_p = 1.67 \times 10^{-27}\ \text{kg}$
molar gas constant,	$R = 8.31\ \text{J K}^{-1}\ \text{mol}^{-1}$
the Avogadro constant,	$N_A = 6.02 \times 10^{23}\ \text{mol}^{-1}$
the Boltzmann constant,	$k = 1.38 \times 10^{-23}\ \text{J K}^{-1}$
gravitational constant,	$G = 6.67 \times 10^{-11}\ \text{N m}^2\ \text{kg}^{-2}$
acceleration of free fall,	$g = 9.81\ \text{m s}^{-2}$

© UCLES 2010

Formulae

uniformly accelerated motion, $s = ut + \frac{1}{2}at^2$

$v^2 = u^2 + 2as$

work done on/by a gas, $W = p\Delta V$

gravitational potential, $\phi = -\frac{Gm}{r}$

hydrostatic pressure, $p = \rho gh$

pressure of an ideal gas, $p = \frac{1}{3}\frac{Nm}{V}\langle c^2 \rangle$

simple harmonic motion, $a = -\omega^2 x$

velocity of particle in s.h.m., $v = v_0 \cos \omega t$

$v = \pm \omega \sqrt{(x_0^2 - x^2)}$

electric potential, $V = \frac{Q}{4\pi\varepsilon_0 r}$

capacitors in series, $1/C = 1/C_1 + 1/C_2 + \ldots$

capacitors in parallel, $C = C_1 + C_2 + \ldots$

energy of charged capacitor, $W = \frac{1}{2}QV$

resistors in series, $R = R_1 + R_2 + \ldots$

resistors in parallel, $1/R = 1/R_1 + 1/R_2 + \ldots$

alternating current/voltage, $x = x_0 \sin \omega t$

radioactive decay, $x = x_0 \exp(-\lambda t)$

decay constant, $\lambda = \frac{0.693}{t_{\frac{1}{2}}}$

© UCLES 2010

[Turn over

Section A

Answer **all** the questions in the spaces provided.

1 **(a)** Define *gravitational field strength*.

.....

.....[1]

(b) An isolated star has radius R. The mass of the star may be considered to be a point mass at the centre of the star.
The gravitational field strength at the surface of the star is g_s.

On Fig. 1.1, sketch a graph to show the variation of the gravitational field strength of the star with distance from its centre. You should consider distances in the range R to $4R$.

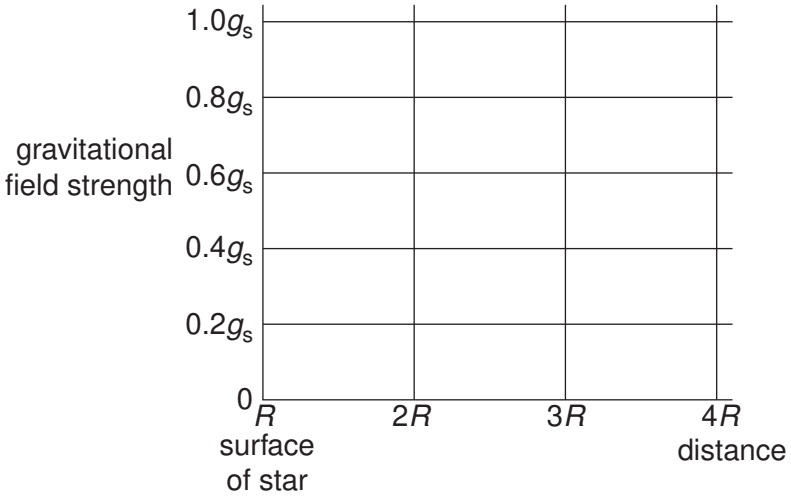

Fig. 1.1

[2]

(c) The Earth and the Moon may be considered to be spheres that are isolated in space with their masses concentrated at their centres.
The masses of the Earth and the Moon are 6.00×10^{24} kg and 7.40×10^{22} kg respectively.
The radius of the Earth is R_E and the separation of the centres of the Earth and the Moon is $60\,R_E$, as illustrated in Fig. 1.2.

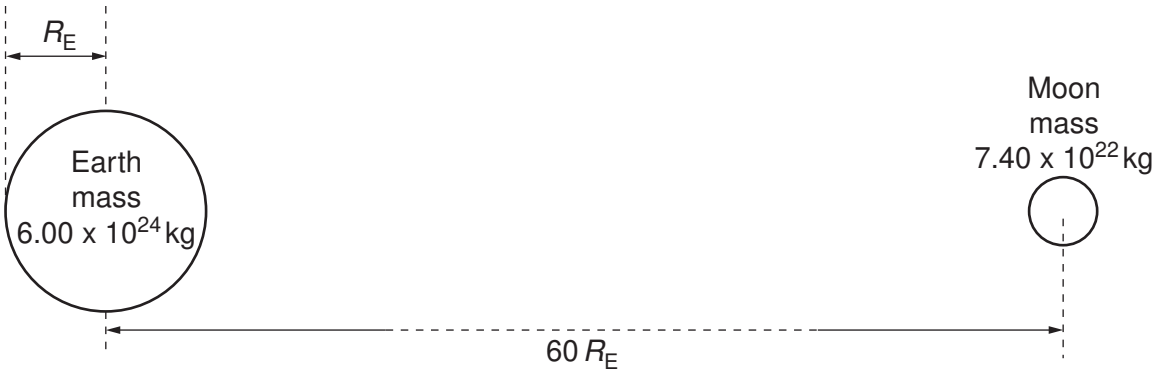

Fig. 1.2 (not to scale)

(i) Explain why there is a point between the Earth and the Moon at which the gravitational field strength is zero.

.....

.....

.....[2]

(ii) Determine the distance, in terms of R_E, from the centre of the Earth at which the gravitational field strength is zero.

distance = ...R_E [3]

(iii) On the axes of Fig. 1.3, sketch a graph to show the variation of the gravitational field strength with position between the surface of the Earth and the surface of the Moon.

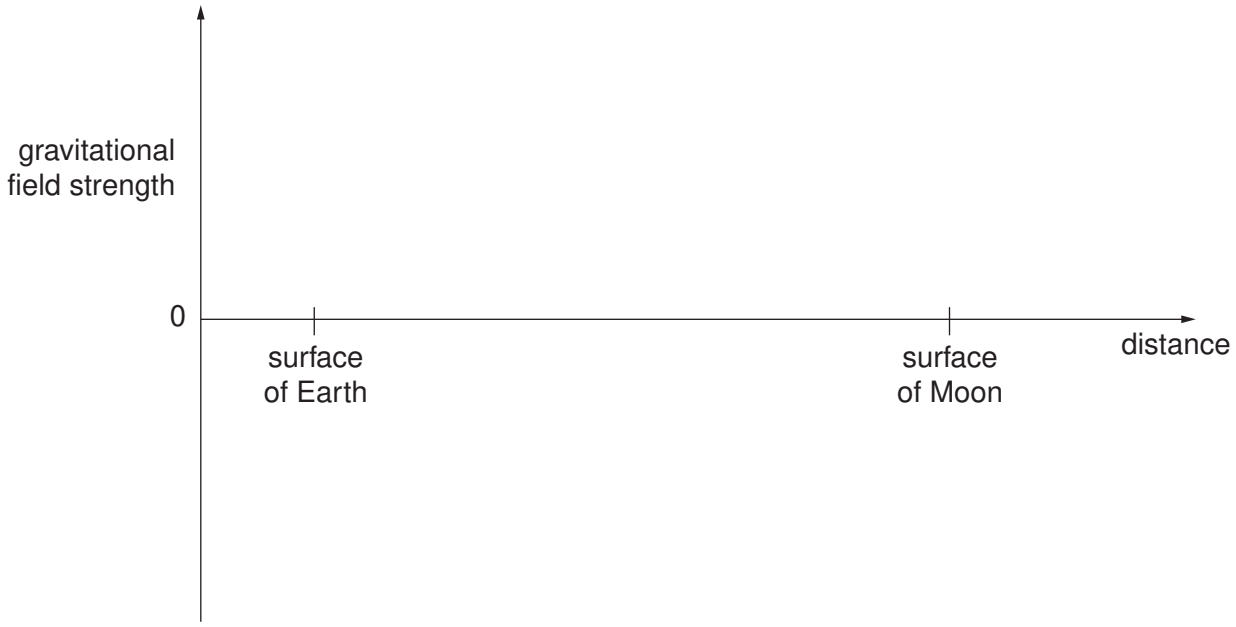

Fig. 1.3

[3]

2 **(a)** **(i)** State the basic assumption of the kinetic theory of gases that leads to the conclusion that the potential energy between the atoms of an ideal gas is zero.

.....

.....[1]

(ii) State what is meant by the *internal energy* of a substance.

.....

.....

.....[2]

(iii) Explain why an increase in internal energy of an ideal gas is directly related to a rise in temperature of the gas.

.....

.....

.....[2]

(b) A fixed mass of an ideal gas undergoes a cycle PQRP of changes as shown in Fig. 2.1.

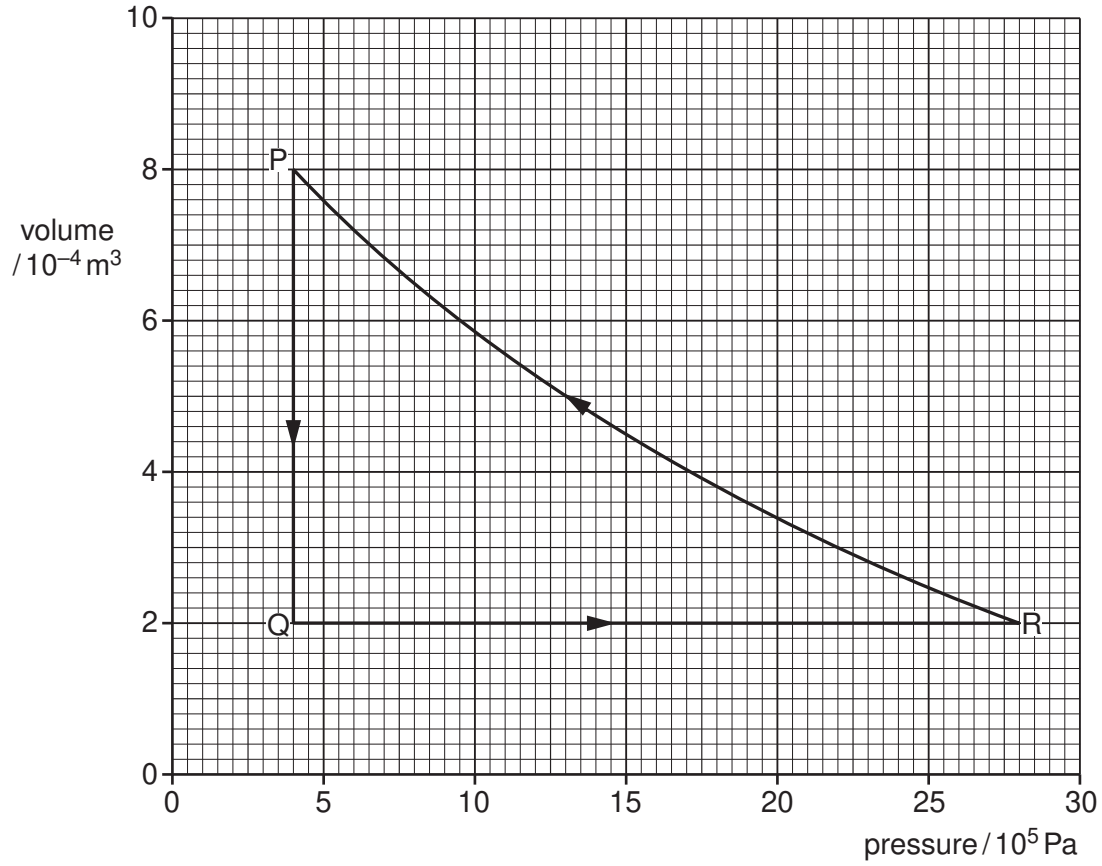

Fig. 2.1

(i) State the change in internal energy of the gas during one complete cycle PQRP.

change = ... J [1]

(ii) Calculate the work done on the gas during the change from P to Q.

work done = ... J [2]

(iii) Some energy changes during the cycle PQRP are shown in Fig. 2.2.

change	work done on gas / J	heating supplied to gas / J	increase in internal energy / J
P → Q	.....	–600	.....
Q → R	0	+720	.....
R → P	.....	+480	.....

Fig. 2.2

Complete Fig. 2.2 to show all of the energy changes. [3]

3 A student sets up the apparatus illustrated in Fig. 3.1 in order to investigate the oscillations of a metal cube suspended on a spring.

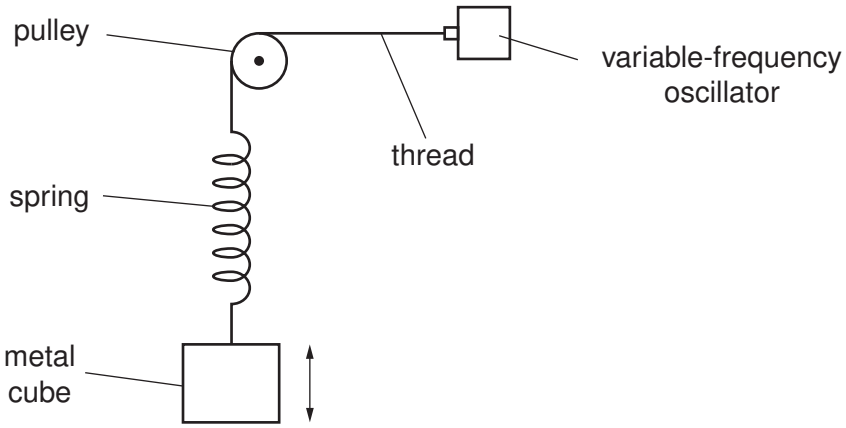

Fig. 3.1

The amplitude of the vibrations produced by the oscillator is constant.
The variation with frequency of the amplitude of the oscillations of the metal cube is shown in Fig. 3.2.

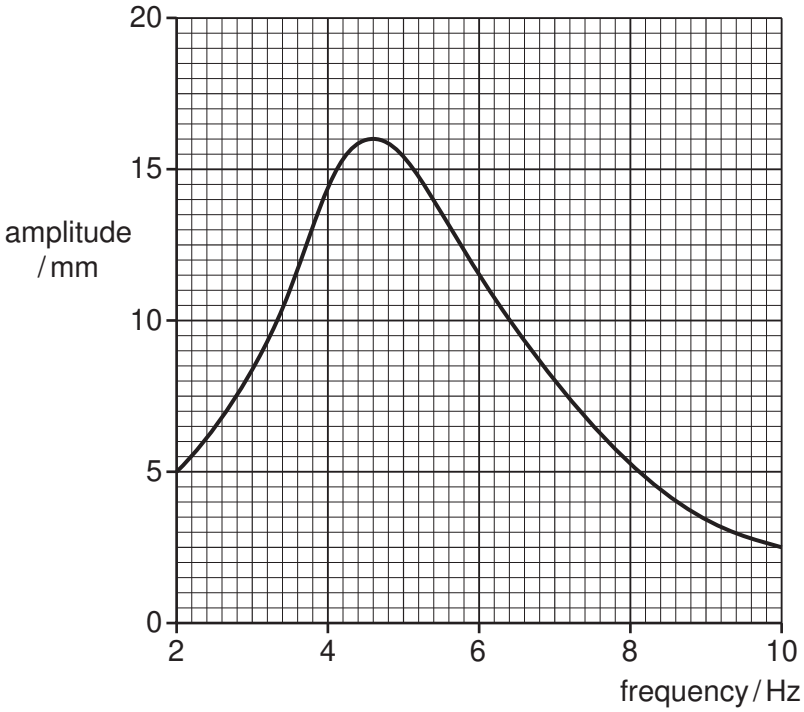

Fig. 3.2

(a) (i) State the phenomenon illustrated in Fig. 3.2.

.....[1]

(ii) For the maximum amplitude of vibration, state the magnitudes of the amplitude and the frequency.

amplitude = ... mm

frequency = ... Hz
[1]

© UCLES 2010

(b) The oscillations of the metal cube of mass 150 g may be assumed to be simple harmonic.
Use your answers in **(a)(ii)** to determine, for the metal cube,

(i) its maximum acceleration,

acceleration = ... $m\,s^{-2}$ [3]

(ii) the maximum resultant force on the cube.

force = ... N [2]

(c) Some very light feathers are attached to the top surface of the cube so that the feathers extend outwards, beyond the vertical sides of the cube.
The investigation is now repeated.
On Fig. 3.2, draw a line to show the new variation with frequency of the amplitude of vibration for frequencies between 2 Hz and 10 Hz. [2]

4 **(a)** Define *capacitance*.

.....

.....[1]

(b) An isolated metal sphere has a radius r. When charged to a potential V, the charge on the sphere is q.
The charge may be considered to act as a point charge at the centre of the sphere.

(i) State an expression, in terms of r and q, for the potential V of the sphere.

.....[1]

(ii) This isolated sphere has capacitance. Use your answers in **(a)** and **(b)(i)** to show that the capacitance of the sphere is proportional to its radius.

[1]

(c) The sphere in **(b)** has a capacitance of 6.8 pF and is charged to a potential of 220 V.

Calculate

(i) the radius of the sphere,

radius = ... m [3]

(ii) the charge, in coulomb, on the sphere.

charge = ... C [1]

(d) A second uncharged metal sphere is brought up to the sphere in **(c)** so that they touch. The combined capacitance of the two spheres is 18 pF.

Calculate

(i) the potential of the two spheres,

potential = ... V [1]

(ii) the change in the total energy stored on the spheres when they touch.

change = ... J [3]

5 Positive ions are travelling through a vacuum in a narrow beam. The ions enter a region of uniform magnetic field of flux density B and are deflected in a semi-circular arc, as shown in Fig. 5.1.

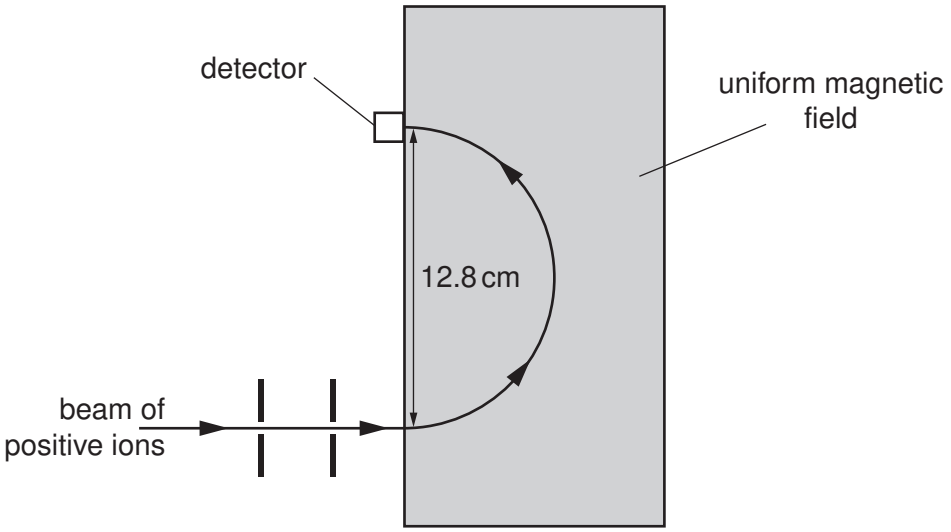

Fig. 5.1

The ions, travelling with speed $1.40 \times 10^5\,\text{m s}^{-1}$, are detected at a fixed detector when the diameter of the arc in the magnetic field is 12.8 cm.

(a) By reference to Fig. 5.1, state the direction of the magnetic field.

.....[1]

(b) The ions have mass 20 u and charge $+1.6 \times 10^{-19}$ C. Show that the magnetic flux density is 0.454 T. Explain your working.

[3]

© UCLES 2010

(c) Ions of mass 22 u with the same charge and speed as those in **(b)** are also present in the beam.

(i) On Fig. 5.1, sketch the path of these ions in the magnetic field of magnetic flux density 0.454 T. [1]

(ii) In order to detect these ions at the fixed detector, the magnetic flux density is changed.
Calculate this new magnetic flux density.

magnetic flux density = ... T [2]

6 A simple iron-cored transformer is illustrated in Fig. 6.1.

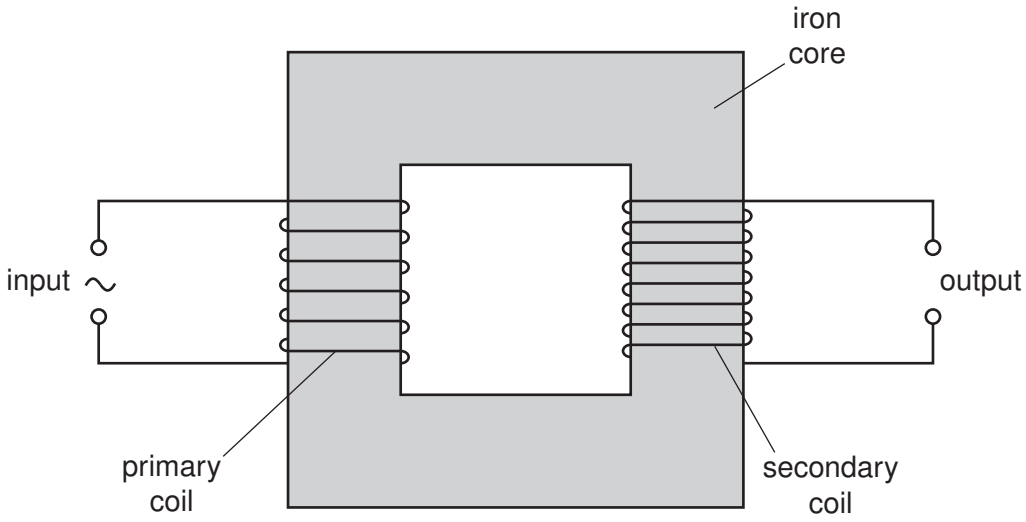

Fig. 6.1

(a) (i) State why the primary and secondary coils are wound on a core made of iron.

.....

.....

.....[1]

(ii) Suggest why thermal energy is generated in the core when the transformer is in use.

.....

.....

.....

.....[3]

© UCLES 2010

(b) The root-mean-square (r.m.s.) voltage and current in the primary coil are V_P and I_P respectively.
The r.m.s. voltage and current in the secondary coil are V_S and I_S respectively.

(i) Explain, by reference to direct current, what is meant by the *root-mean-square* value of an alternating current.

.....

.....

.....[2]

(ii) Show that, for an ideal transformer,

$$\frac{V_S}{V_P} = \frac{I_P}{I_S} .$$

[2]

7 **(a)** State an effect, one in each case, that provides evidence for

(i) the wave nature of a particle,

.....[1]

(ii) the particulate nature of electromagnetic radiation.

.....[1]

(b) Four electron energy levels in an atom are shown in Fig. 7.1.

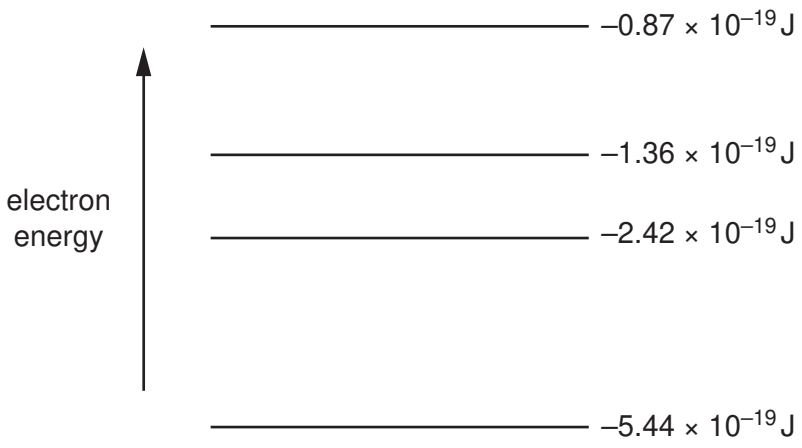

Fig. 7.1 (not to scale)

An emission spectrum is associated with the electron transitions between these energy levels.
For this spectrum,

(i) state the number of lines,

.....[1]

(ii) calculate the minimum wavelength.

wavelength = ... m [2]

© UCLES 2010

8 In some power stations, nuclear fission is used as a source of energy.

(a) State what is meant by *nuclear fission*.

.....

.....

.....[2]

(b) The nuclear fission reaction produces neutrons. In the power station, the neutrons may be absorbed by rods made of boron-10.
Complete the nuclear equation for the absorption of a single neutron by a boron-10 nucleus with the emission of an α-particle.

$$^{10}_{5}\text{B} + \text{.....} \rightarrow \text{.....}^{}_{3}\text{Li} + \text{.....} \quad [3]$$

(c) Suggest why, when neutrons are absorbed in the boron rods, the rods become hot as a result of this nuclear reaction.

.....

.....

.....

.....[3]

Section B

Answer **all** the questions in the spaces provided.

9 An amplifier circuit incorporating an operational amplifier (op-amp) is shown in Fig. 9.1.

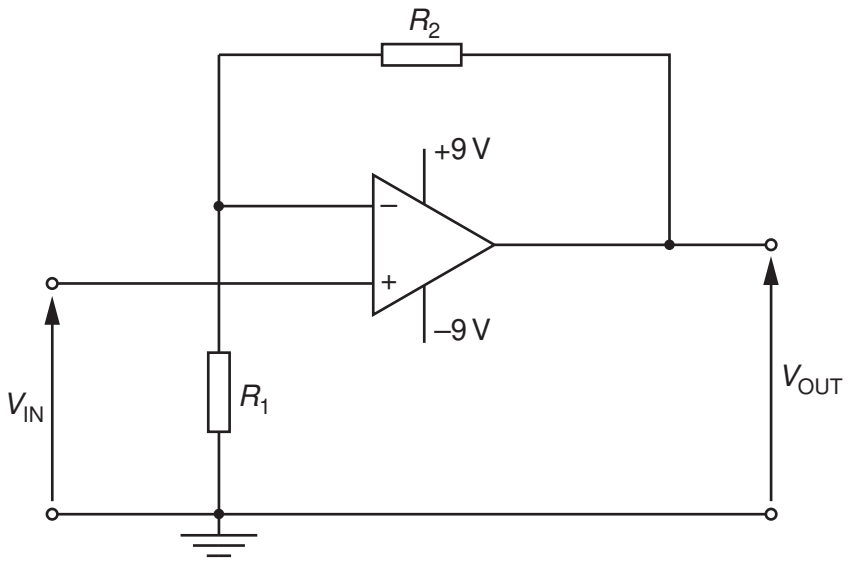

Fig. 9.1

(a) State

(i) the name of this type of amplifier circuit,

.....[1]

(ii) the gain G in terms of resistances R_1 and R_2.

.....[1]

(b) The value of R_1 is 820 Ω. The resistor of resistance R_2 is replaced with a light-dependent resistor (LDR).
The input potential difference V_{IN} is 15 mV.
Calculate the output potential difference V_{OUT} for the LDR having a resistance of

(i) 100 Ω (the LDR is in sunlight),

V_{OUT} = ... V [2]

(ii) 1.0 MΩ (the LDR is in darkness).

V_{OUT} = ... V [1]

10 (a) (i) State what is meant by the *acoustic impedance* of a medium.

.....

.....[1]

(ii) Data for some media are given in Fig. 10.1.

medium	speed of ultrasound / $m\,s^{-1}$	acoustic impedance / $kg\,m^{-2}\,s^{-1}$
air	330	4.3×10^2
gel	1500	1.5×10^6
soft tissue	1600	1.6×10^6
bone	4100	7.0×10^6

Fig. 10.1

Use data from Fig. 10.1 to calculate a value for the density of bone.

density = ... $kg\,m^{-3}$ [1]

(b) A parallel beam of ultrasound has intensity I. It is incident at right-angles to a boundary between two media, as shown in Fig. 10.2.

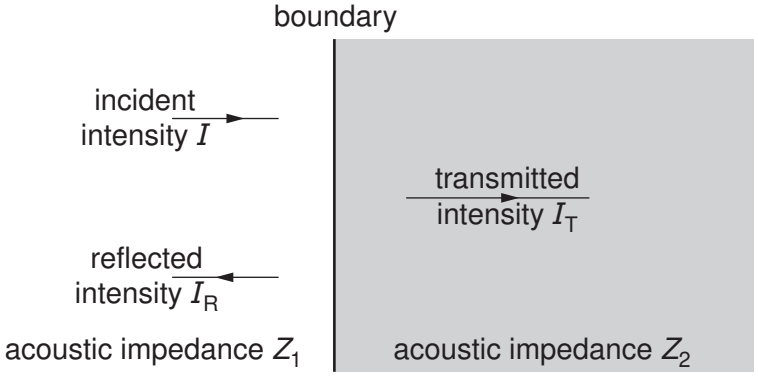

Fig. 10.2

The media have acoustic impedances of Z_1 and Z_2. The transmitted intensity of the ultrasound beam is I_T and the reflected intensity is I_R.

(i) State the relation between I, I_T and I_R.

.....[1]

© UCLES 2010

(ii) The reflection coefficient α is given by the expression

$$\alpha = \frac{(Z_2 - Z_1)^2}{(Z_2 + Z_1)^2}.$$

Use data from Fig. 10.1 to determine the reflection coefficient α for a boundary between

1. gel and soft tissue,

α = ...[2]

2. air and soft tissue.

α = ...[1]

(c) By reference to your answers in **(b)(ii)**, explain the use of a gel on the surface of skin during ultrasound diagnosis.

.....

.....

.....

.....[3]

11 **(a)** Wire pairs provide one means of communication but they are subject to high levels of noise and attenuation.
Explain what is meant by

(i) *noise*,

.....

.....[1]

(ii) *attenuation*.

.....

.....[1]

(b) A microphone is connected to a receiver using a wire pair, as shown in Fig. 11.1.

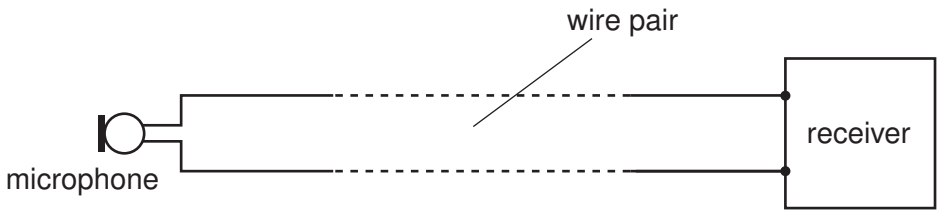

Fig. 11.1

The wire pair has an attenuation per unit length of $12\,\text{dB}\,\text{km}^{-1}$. The noise power in the wire pair is 3.4×10^{-9}W.
The microphone produces a signal power of $2.9\,\mu$W.

(i) Calculate the maximum length of the wire pair so that the minimum signal-to-noise ratio is 24 dB.

length = ... m [4]

(ii) Communication over distances greater than that calculated in **(i)** is required.
Suggest how the circuit of Fig. 11.1 may be modified so that the minimum signal-to-noise ratio at the receiver is not reduced.

.....

.....

.....[2]

© UCLES 2010

12 (a) Outline the principles of the use of a geostationary satellite for communication on Earth.

.....

.....

.....

.....

.....

.....

.....

.....[4]

Question 12 continues on the next page.

(b) Polar-orbiting satellites are also used for communication on Earth.
State and explain one advantage and one disadvantage of polar-orbiting satellites as compared with geostationary satellites.

advantage: .....

.....

.....

.....

disadvantage: .....

.....

.....

.....

[4]

Permission to reproduce items where third-party owned material protected by copyright is included has been sought and cleared where possible. Every reasonable effort has been made by the publisher (UCLES) to trace copyright holders, but if any items requiring clearance have unwittingly been included, the publisher will be pleased to make amends at the earliest possible opportunity.

University of Cambridge International Examinations is part of the Cambridge Assessment Group. Cambridge Assessment is the brand name of University of Cambridge Local Examinations Syndicate (UCLES), which is itself a department of the University of Cambridge.